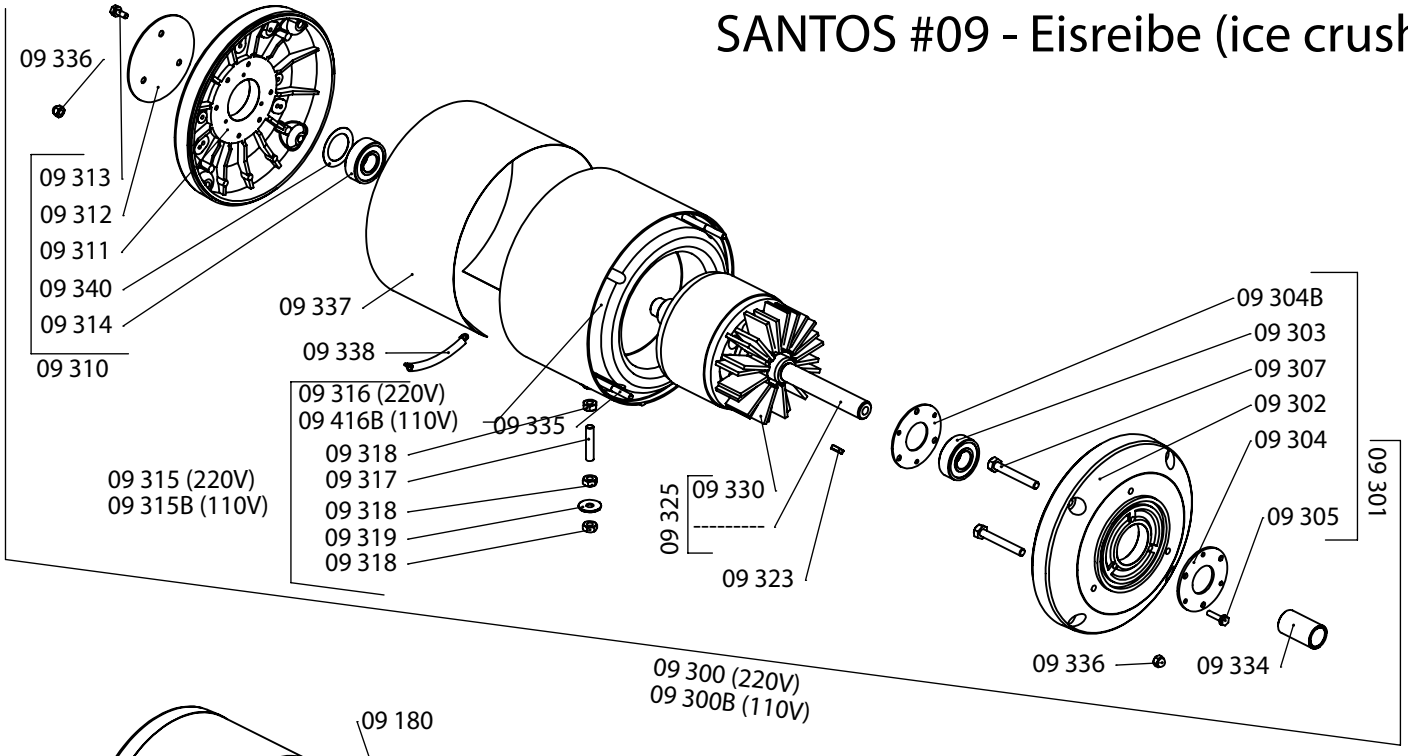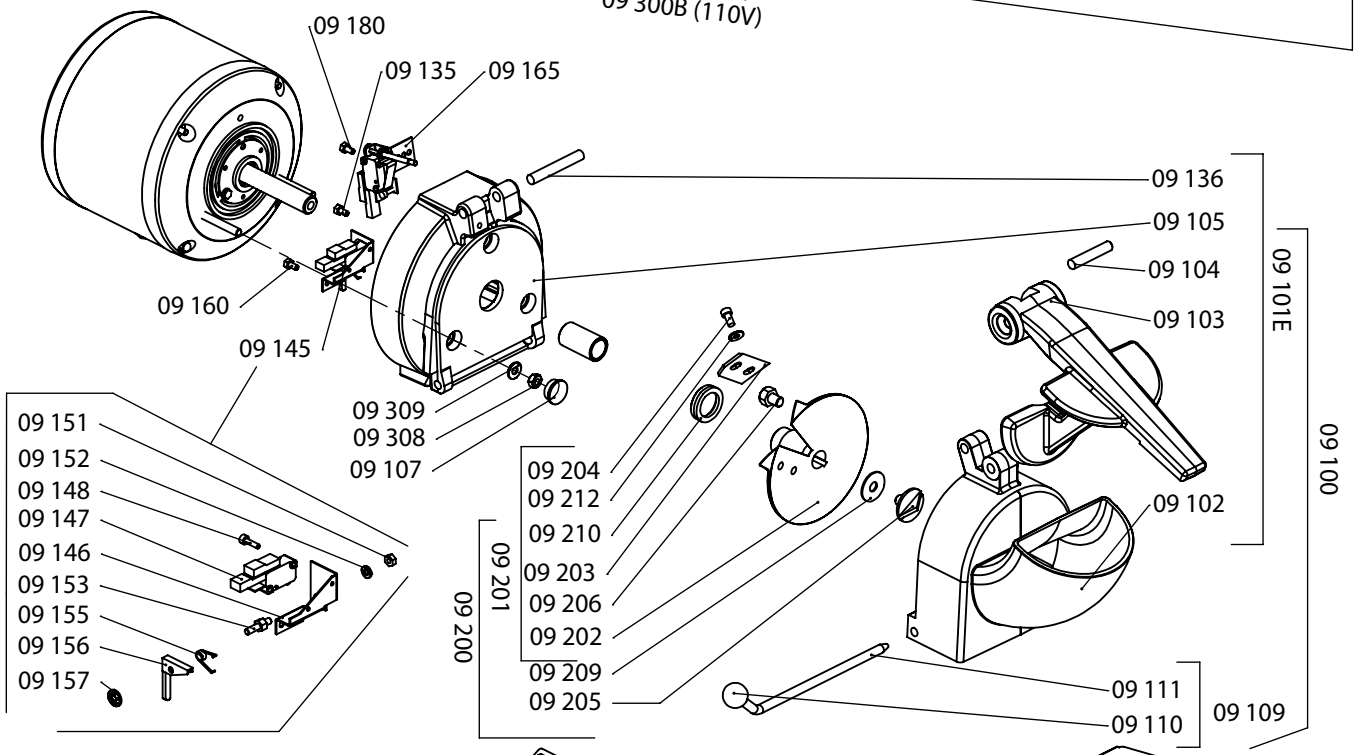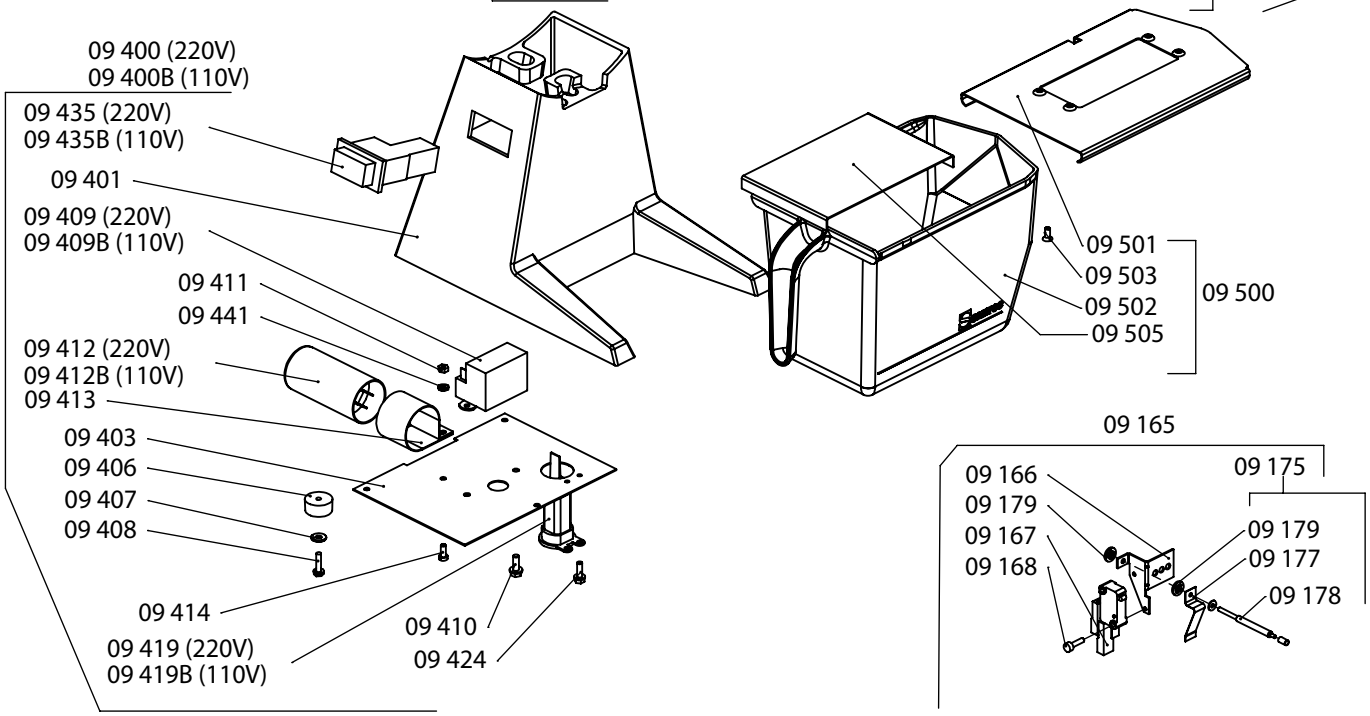SANTOS #09 - Eisreibe (ice crusher)